Laser ionization mass spectrometry in supersonic beams

By Roger Tembreull, Chung Hang Sin, Ho Ming Pang, and David M. Lubman

Mass spectrometry still remains one of the most powerful means of chemical analysis based upon the exact mass identification of molecular species. This identification may be based upon the parent ion or extensive fragmentation patterns induced by electron beam or collision induced phenomena. For analysis of mixtures of compounds generally tandem methods must be employed to obtain sufficient discrimination for identification in mass spectrometry.

These techniques may include preseparation methods such as gas and liquid chromatography (GC and LC), tandem mass spectrometry methods such as mass spec/mass spec (MS/MS), mass analyzed ion kinetic energy spectra (MIKES), and metastable peak monitoring. Also a variety of soft and hard ionization methods can alter the fragmentation pattern obtained and can also provide some selectivity in the molecules ionized as in chemical ionization.

Optical ionization spectroscopy, on the other hand, offers an alternate means of obtaining selectivity in mass spectrometry based on the unique absorption spectra of molecules in the gas phase. In particular, laser multiphoton ionization (MPI) spectroscopy, in conjunction with the ultracold spectral features produced by supersonic molecular beam injection, has the potential for preselecting ions in mass spectrometry.

Multiphoton ionization

The multiphoton technique depends upon the absorption of several photons by a molecule upon irradiation with an intense visible or ultraviolet light (laser) source. When the laser frequency is tuned to a real intermediate electronic state, the cross-section for ionization is greatly enhanced and is known as resonance enhanced multiphoton ionization (REMPI). When the laser is not tuned to a real state, the probability for MPI drops by many orders of magnitude.

Thus, although ions are produced as the final product for detection, the ionization cross-section reflects the absorption-excitation spectrum of the intermediate state. The truly unique property of MPI is that it can be used as a means of achieving spectral selection of a compound prior to mass analysis.

The particular MPI method used in our work is resonant two photon ionization (R2PI). In this process one photon excites a molecule to an excited electronic state, i.e., $S_0 \rightarrow S_1$, and a second photon ionizes the molecule (Fig. 1).

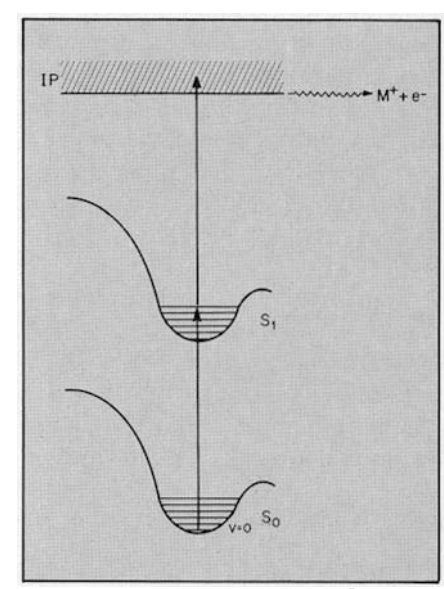

FIGURE 1. Resonant two-photon ionization process.

ROGER TEMBREULL, CHUNG HANG SIN, and HO MING PANG are presently Ph.D. candidates in the Department of Chemistry at the University of Michigan, Ann Arbor. DAVID M. LUBMAN is an assistant professor in the Department of Chemistry at the University of Michigan, Ann Arbor, Mich.

Thus, the energy sum of the two photons must be greater than the ionization potential of the molecule for R2PI although the two photons may be either the same or two different frequencies.

Since most large organic species of interest have ionization potentials between 7 and 13 eV, R2PI can be achieved using near-UV pulsed laser sources (7 eV requires two 354-nm photons; 13 eV requires two 191-nm photons). Thus broadly-tunable Nd:YAG and excimer pumped frequency doubled-dye lasers in the UV serve as versatile sources for resonant ionization of molecules.

Although direct photoionization could also be achieved, this would require vacuum ultraviolet radiation, for which laser technology is only now being extensively developed. More significantly, in R2PI wavelength selectivity results from being resonant with an intermediate state while such selectivity is lost in the direct ionization process.

R2PI has several important attributes for mass spectrometry in addition to its potential for selectivity. R2PI can provide very efficient soft ionization of molecules where only the molecular ion is formed with little or no fragmentation for identification. With electron beam ionization, soft ionization is obtained only with a significant decrease in ionization efficiency. R2PI may provide typically several percent efficiency in ionization or higher[1-4] within the laser beam volume while the laser beam is on (beam intensity $\sim 10^6$ W/cm^2), although of course the efficiency is limited by the duty cycle of the laser.

In the MPI process, fragmentation can be induced for structural analysis by adjusting the laser power density in the interaction region so that either molecular ions or ionic fragments are produced.[3-6] Extensive fragmentation occurs as the power density is increased and fragments as small as C^+ have been observed in hydrocarbons ionized at very high power densities. Thus, the laser serves as a versatile ionization source for mass spectrometry.

R2PI can provide very efficient soft ionization of molecules where only the molecular ion is formed with little or no fragmentation for identification.

The optical selectivity possible by R2PI is limited by the gas-phase UV spectra of polyatomic molecules which are often rather broad and structureless at room temperature. This broad structure results from thermal population of a wide range of internal states, i.e, rotations and vibrations of a molecule, thus causing congestion in the spectrum.

In order to make this a viable tool for analysis, this broad contour must be "cooled out" so that the structure collapses down to several sharp peaks. This is accomplished using the supersonic beam technique in which a small amount of a large polyatomic molecule is seeded into a large bath of a light carrier gas such as Ar and expanded through an orifice into vacuum. As the molecules expand in the high collisional regime from the orifice, rapid cooling of the molecules is obtained by conversion of the energy of the internal degrees of freedom into the translational energy of the carrier gas via two-body collisions.

There are a number of excellent reviews that detail the dynamics of supersonic molecular beam sources.[7,8] The key point here is that a spectrum with broad features (>100 cm^{-1}) is converted to a spectrum with several sharp features (3–6 cm^{-1}), which can be used to uniquely identify a molecule in a mass spectrometer.

Instrumentation

The instrumentation used for these experiments is shown in Fig. 2 and consists of a differentially pumped linear time-of-flight mass spectrometer (TOFMS) and a pulsed valve source which injects the supersonic beam into the TOF acceleration region. The laser source intersects the supersonic gas pulse at right angles and produces laser photoionization. The ions are then accelerated into a drift tube and separated according to their mass/charge ratio.

The ions are detected at a dual microchannelplate, and the molecular ion only can be monitored using the gate of a gated intergrator, i.e., an electronic shutter, as a function of wavelength. The key here is that now mass-selected wavelength spectroscopy is possible for unique identification where one axis is the ion signal, the second axis is the wavelength spectrum, and the third is the mass spectrum. We now have multidimensional mass spectrometry, where the optical method serves as one means of selectively identifying molecules in a mass spectrometer.

The linear TOF was chosen for these experiments since the whole photoionization mass spectrum can be obtained on each pulse in order to compensate for the low duty cycle of the laser. Other mass spectrometers are suitable for these experiments including Fou-

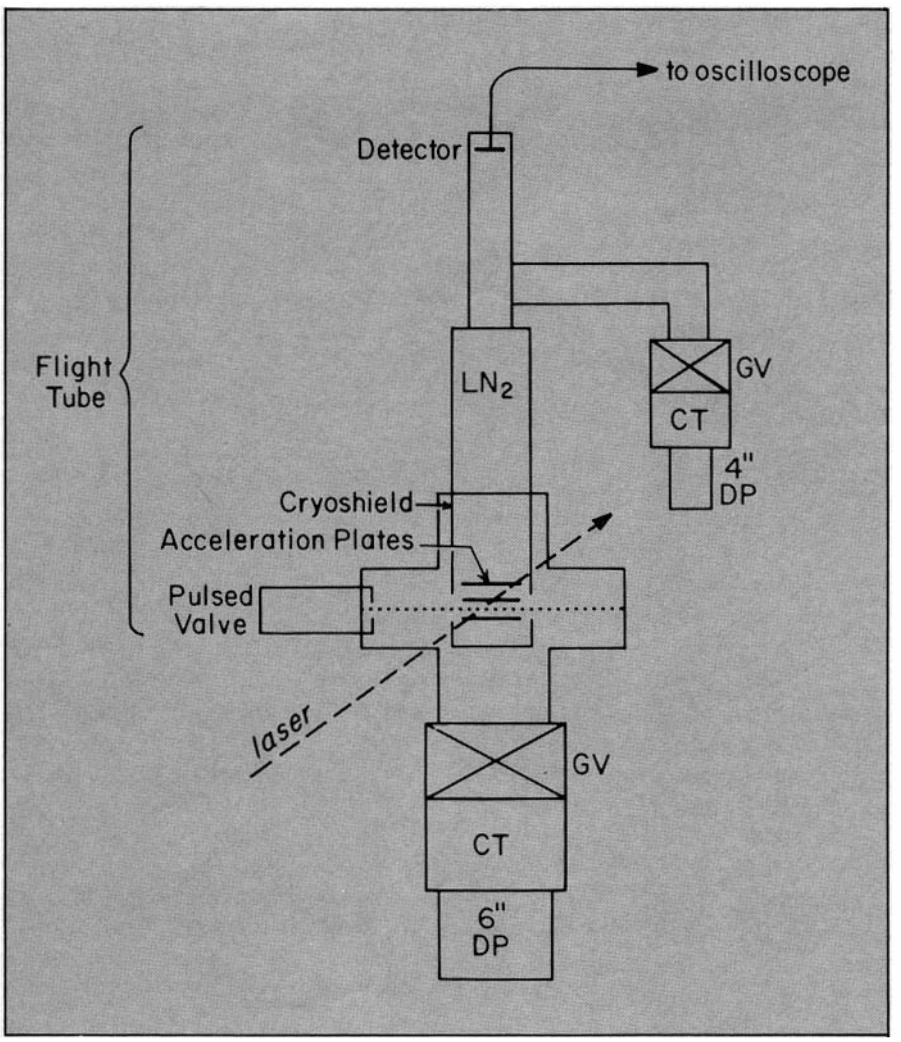

FIGURE 2. Supersonic beam time-of-flight mass spectrometer where DP = diffusion pump, CT = cold trap, GV = gate valve, LN_2 = liquid nitrogen trap.

rier transform mass spectrometers, Mattauch-Herzog dual sector instruments and reflectron TOF devices. However, the linear TOF device was chosen for its simplicity and sufficient resolution which can be >1000 by using the supersonic jet technique in order to minimize the initial energy spread of ions produced.[3]

The pulsed valve source is customarily used in these experiments to reduce the duty cycle necessary for pumping the gas load of the jet; i.e., since ions are produced by a pulsed excitation source it makes sense to synchronously pulse the gas source. This allows the use of a large orifice (500 μm) which provides high on-axis density for increased sensitivity for analysis. The particular pulsed source (R.M. Jordan Co.) emits ~50 μsec pulses of gas at 10 Hz so that the duty cycle for pumping is reduced by a factor of ~2000! Since the throughput through the nozzle varies as (diameter)^2, an orifice of only 45 μm could be used in a continuous expansion under the same pumping conditions with a concomitant decrease in sensitivity, i.e., as d^2.

The idea of laser-selective ionization can be used to aid in problems that may be difficult to solve by mass spectrometry alone. There are several such problems that can be identified including isomer and isobar discrimination; isotope selective analysis; trace analysis of components in a complicated matrix; and analysis of biological molecules with soft ionization. Simple examples of solutions to such problems are illustrated in Figs. 3 to 6. Figure 3 shows mass-selected wavelength ionization spectra of the three isomers of cresol. Isomers are compounds that have the same molecular formula and thus molecular weight.

In order to distinguish these compounds by non-laser mass spectrometry, fragmentation patterns are produced by electron impact or collisional dissociation. Furthermore, in real analysis where additional discrimination is required, a tandem technique such as gas chromatography/mass spectrometry (GC-MS), mass spec/mass spec (MS/MS), or ion kinetic energy measurements in mass spec (MIKES) may be necessary to discriminate such isomers.

Sometimes, for ortho-, meta-, para-isomers, and such similar compounds, the discrimination by these methods may still not be adequate. However, the cold wavelength spectroscopy obtained in supersonic jet expansions may serve as a means of obtaining sufficient discrimination to aid in trace analysis problems. Figure 3 indeed demonstrates that each of the isomers has unique sharp spectral features (<4 cm^{-1}) in the jet expansion that can be used to discriminate among them.[8]

These spectra were obtained by expanding several ppm of cresol in a 1 atm reservoir of Ar or air into vacuum at 10^{-6} torr. There is no fragmentation in the photoioniza-

The cold wavelength spectroscopy obtained in supersonic jet expansions may serve as a means of obtaining sufficient discrimination to aid in trace analysis problems.

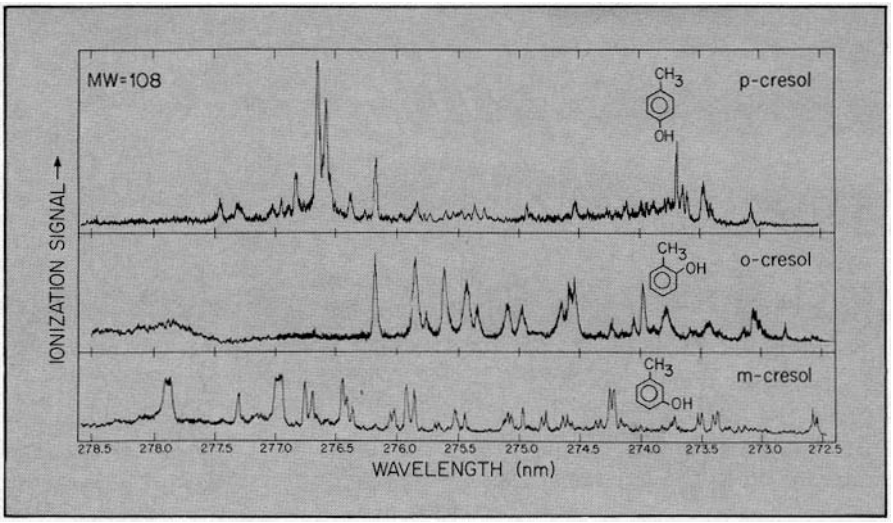

FIGURE 3. Mass selected ionization spectra of the three isomers of cresol in a supersonic expansion from 1 atm Ar.

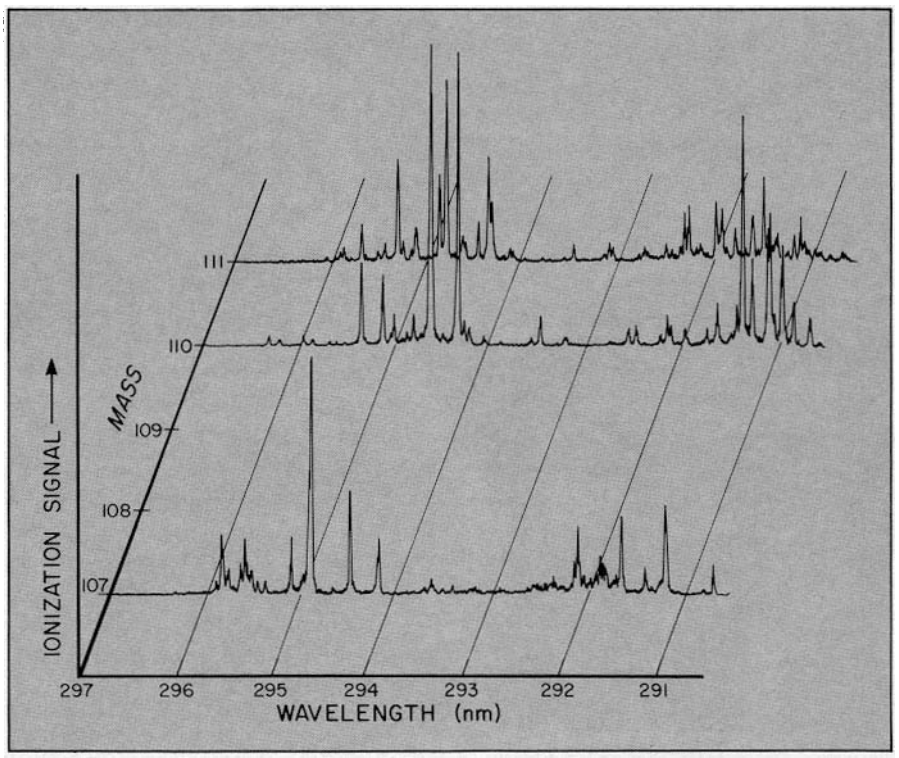

FIGURE 4. Three dimensional mass spectrum of a mixture of hydroquinone (M/e = 110) toluidine (M/e = 107) and fluoroaniline (M/e = 111) expanded in a supersonic jet of Ar.

tion process so that only the molecular ion at M/e = 108 is being monitored as a function of wavelength. Using various mixtures of isomers it was determined in our experiments that at least a discrimination of 1:300 to 1:500 is possible between any combination of the isomers by tuning the laser to the appropriate wavelength.

In addition, the pulsed molecular beam technology allows sampling of these volatiles from 1 atm laboratory air so that this technique could be used for atmospheric pollution monitoring measurements. The sensitivity of these measurements reaches down to the low parts-per-billion (ppb) level and has been limited by our ability to accurately prepare concentrations in the parts-per-trillion (ppt) range. It should be noted that wavelength selectivity can similarly be used to identify compounds in a mixture using both the mass and wavelength capabilities if the components have different molecular weights. This is demonstrated in Fig. 4, where three different disubstituted benzenes are distinguished by three-dimensional mass spectrometry where the wavelength spectrum serves to uniquely identify each mass peak.[10]

A second important application of the laser ionization-supersonic beam method may be for selective isotopic monitoring. Isotopic monitoring finds important uses in clinical assays, where analysis is often performed using radioisotopic tracers. However, the ability to monitor nonradioactive isotopic tracers for clinical and biomedical assays using a combination of laser selectivity and mass spectrometric analysis would avoid the hazard of using radioactive materials.

The key to molecular isotopic analysis is that it is vibrational isotopic shifts in an electronic transition that are being probed and these shifts may be on the order of several cm^{-1}. In comparison, isotopic shifts studied in resonance ionization spectroscopy (RIS) in atoms is based on much smaller changes in the energy of the electronic states involved. Thus, in molecular isotopic analysis by R2PI relatively low resolution

pulsed dye lasers can be used to discriminate among isotopes.

Even et al. first demonstrated selective detection of ^{13}C in aniline (normal abundance ~6%) with enhancement of up to 35 using laser ionization in a supersonic jet.[11] The isotopic vibrational shifts are typically 3 to 4 cm^{-1} in this case, well within the resolution of modern pulsed dye lasers. Figure 5 shows a laser-induced ionization mass spectrum of the isotopes of dichlorotoluene where the natural abundance of Cl isotopes is $^{35}Cl^{35}Cl$:$^{35}Cl^{37}Cl$:$^{37}Cl^{37}Cl$ in a ratio of 9:6:1.[12] Note that as the laser wavelength is varied, the relative ratios of the isotopic peaks are enhanced for a particular isotope that strongly absorbs that wavelength.

A fourth promising use of this method might be for soft ionization of biological species in mass spectrometry. The main problem with most biological molecules is that they are nonvolatile or thermally labile, i.e., they decompose upon heating and have very low vapor pressures at low temperature. A number of methods have been utilized to volatilize such molecules into jet expansions including supercritical fluid injection, thermospray, and other liquid methods, and more recently laser desorption. The latter technique has been used both by our lab[13] and the Schlag group[14] for volatilizing neutral biological molecules into jets followed by laser ionization.

The laser desorption process involves using a pulsed infrared laser to induce a rapid heating process which desorbs molecules from a surface before they have time to thermally decompose.[15] Although both neutrals and ions can be formed depending on the surface temperature, at power densities $<10^7$ W/cm^2 neutrals appear to be the predominant species. The desorbed molecules are caught into a pulsed supersonic flow and swept into a TOFMS where laser photoionization is produced.

A number of important biomolecules have been examined by the groups pursuing this work including catecholamines and indoleamines, amino acids, drugs, small peptides, porphyrins, and chlorophyll. In each case either soft ionization or minimal fragmentation was observed as shown in Fig. 6 for the case of dopa and dopamine. The next step, of course, is to obtain the wavelength spectroscopy of each of these biological species.

Soft ionization and wavelength selective ionization of biological molecules has the potential to revolutionize trace detection for qual-

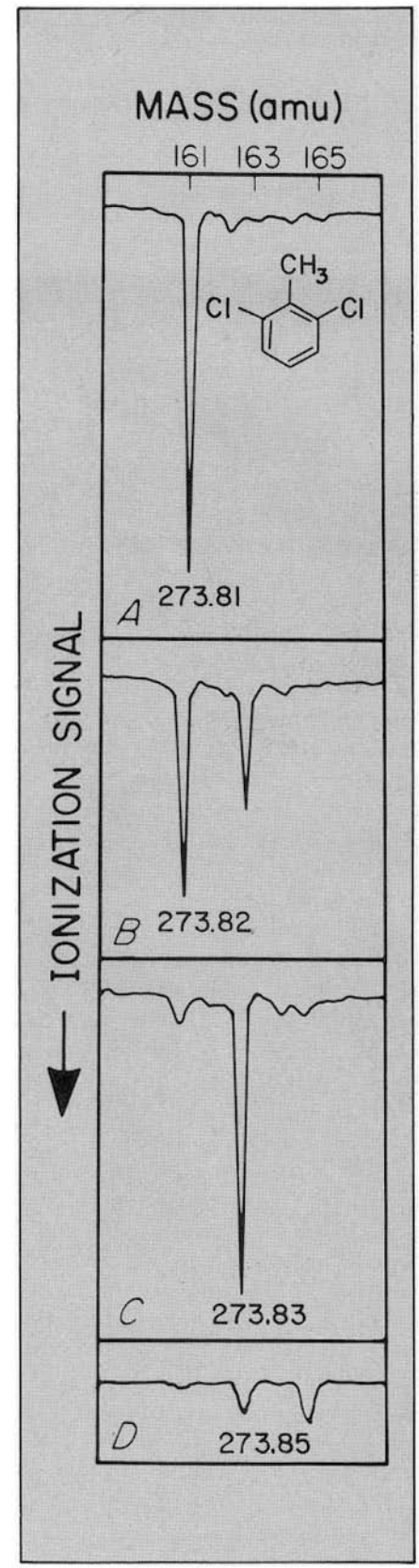

FIGURE 5. Laser ionization mass spectrum of the molecular ions of the Cl isotopes of dichlorotoluene expanded in a supersonic jet of Ar as a function of wavelength where (a) 273.81 nm, (b) 273.82 nm, (c) 273.84 nm, (d) 273.85 nm.

Resonant Two-Photon Ionization (R2PI)

Advantages	Disadvantages
Efficient ionization (0.01–100%) for high sensitivity.	Low duty cycle of pulsed laser ionization sources available.
Soft ionization (molecular ions or minimal fragmentation) with high efficiency.	Full capabilities not explored.
Hard ionization—extensive fragmentation by increasing laser power.	Fragmentation patterns not as versatile as EI.
Selectivity based on: (a) sharp optical absorptions (b) differences in ionization potentials	May be limited by nonresonant ionization and background continuum absorption as wavelength decreases.
Uses high peak power, coherent near UV pulsed sources to achieve above advantages.	Present laser systems are expensive and need skilled operators.

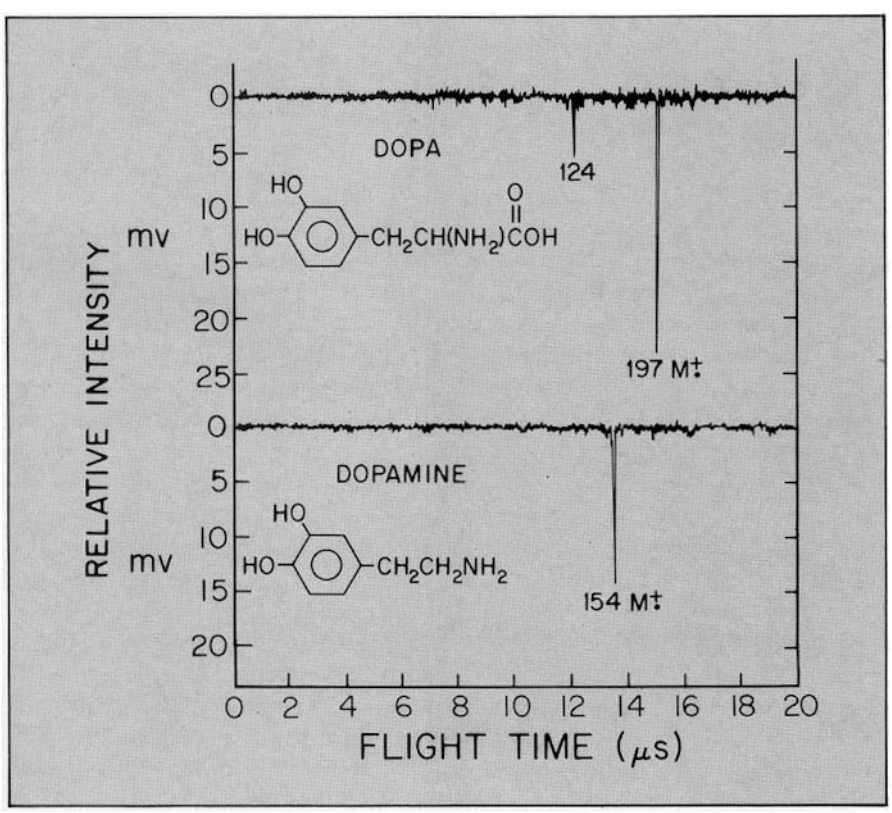

FIGURE 6. Laser desorption-laser ionization (λ=280 nm) mass spectra of dopa and dopamine expanded in a supersonic jet of Ar.

ity control monitoring in the pharmaceutical industry and for unique identification in pharmacological and clinical analysis.

Acknowledgment

The authors gratefully acknowledge support of this work under NSF Grant CHE-8419383 and partial support by the Army Research Office under Grant DAAG 29–85-K-1005.

References

1. T.G. Dietz, M.A. Duncan, M.G. Liverman, and R.E. Smalley, Chem. Phys. Lett. **70**, 246 (1980).
2. R. Frueholz, J. Wessel, and E. Wheatley, Anal. Chem. **52**, 281 (1980).
3. D.M. Lubman, M.N. Kronick, Anal. Chem. **54**, 660 (1982).
4. U. Boesl, H.J. Neusser, and E.W. Schlag, Chem. Phys. **55**, 193 (1981).
5. L. Zandee and R.B. Bernstein, J. Chem. Phys. **71**, 1359 (1979).
6. R. B. Opsal and J.P. Reilly, *Optics News* **12**, 18 (1986).
7. J.B. Anderson, R.P. Andres, and J.B. Fenn, Adv. Chem. Phys. **10**, 275 (1966).
8. R.E. Smalley, L. Wharton, and D.H. Levy, Acc. Chem. Res. **10**, 139 (1977).
9. R. Tembreull and D.M. Lubman, Anal. Chem. **56**, 1962 (1984).
10. C.H. Sin, R. Tembreull, and D.M. Lubman, Anal Chem. **56**, 2776 (1984).
11. S. Leutwyler and U. Even, Chem. Phys. Lett. **81**, 578 (1981).
12. D.M. Lubman, R. Tembreull, and C.H. Sin, Anal. Chem **57**, 1084 (1985).
13. R. Tembreull and D.M. Lubman, Anal. Chem. **58**, 1299 (1986).
14. J. Grotemeyer, U. Boesl, K. Walter, and E.W. Schlag, "Biomolecules investigated by multi-photon ionization mass spectrometry," Paper TOE-12, presented at the 34th Conference on Mass Spectrometry and Allied Topics, Cincinnati, Ohio, June 1986 (to be published).
15. M.A. Posthumas, P.G. Kistemaker, H.L.C. Meuzelaar, and M.C. Ten Noever deBrauw, Anal. Chem. **50**, 985 (1978).